Exam.Code:0941
Sub. Code: 33864

2076
B. E. (Mechanical Engineering)
Fifth Semester
MEC-503: Robotics

Time allowed: 3 Hours **Max. Marks: 50**

NOTE: ***Attempt <u>five</u> questions in all, including Question No. I which is compulsory and selecting two questions from each Part.***

x-x-x

1. a) What is inverse kinematics of robot?
   b) Define Cartesian space trajectory
   c) Define payload capacity of robot.
   d) Differentiate between internal gripping and external griping.
   e) Define working principle of Tactile sensor. 5x2

Part A

2. a) What do you mean by Robot configuration w.r.t. movements? 5
   b) A frame {B} is described as initially coincident with {A}; then rotate {B} about the vector ${}^{A}\hat{K} = [\ 0.707\ 0.707\ 0.0\ ]^{T}$ (passing through the point ${}^{A}P = [\ 1.0\ 2.0\ 3.0]$) by an amount $\theta = 30$ degrees. Give the frame description of {B}. 5

3. a) A 6-DOF manipulator has three consecutive intersecting wrist axes. Show how Pieper's solution can be applied to find joint variables 5
   b) The force and torque in the base co-ordinate frame are given by 5
   f = 10i + 0j + 0k; m = 0i + 10j + 0k. Determine the force and torque at the tool tip frame described by

$$A = \begin{bmatrix} 0 & 0 & 1 & 10 \\ 1 & 0 & 0 & 5 \\ 0 & 1 & 0 & 0 \\ 0 & 0 & 0 & 1 \end{bmatrix}$$

4. a) Find the Jacobian of the linear velocities of RRR manipulator as shown in fig. 5

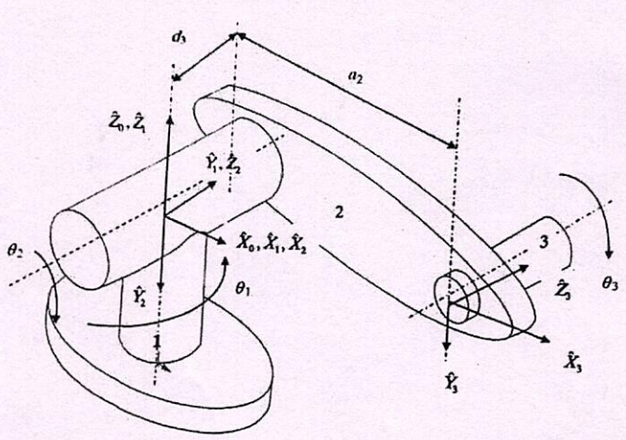

Fig.1 Spatial manipulator with three revolute joints-frame assignment

Contd.....P/2

b) Given 5

$$ {}^{A}_{B}\mathrm{T} = \begin{bmatrix} 0.866 & -0.500 & 0.000 & 10.0 \\ 0.500 & 00.866 & 0.000 & 0.0 \\ 0.000 & 0.000 & 1.000 & 5.0 \\ 0 & 0 & 0 & 1 \end{bmatrix}; $$

If the velocity vector at the origin of {A} is

$$ \mathrm{A_v} = \begin{bmatrix} 0.0 \\ 2.0 \\ -3.0 \\ 1.414 \\ 1.414 \\ 0.0 \end{bmatrix} $$

Find the 6x1 velocity vector with reference point the origin of {B}.

Part B

5. a) What is the inertia tensor; if the body is a thin rod? 5

b) Drive Lagrangian equation of motion. 5

6. a) Explain robotic vision with block diagram. 5

b) Why actuator location is important? Explain w.r.t transmission system in robots. 5

7. Explain working principle of with neat sketch 2x5

a) Force and torque sensor b) Range sensor

x-x-x