Exam.Code:0941
Sub. Code: 33863

2076

B. E. (Mechanical Engineering)

Fifth Semester

MEC-502: Computer Aided Design and Manufacturing (CAD/CAM)

Time allowed: 3 Hours **Max. Marks: 50**

NOTE: ***Attempt five questions in all, including Question No. 1 which is compulsory and selecting two questions from each Part.***

x-x-x

1	a) What is the role of homogeneous coordinates in geometric transformations? b) Describe part surface and drive surface in APT with sketch. c) Differentiate between absolute and incremental coordinates with example. Write their G Codes also. d) Find the parametric equations of the following lines: (a) Line 1 passing through points (4, 5) and (6, 7) (b) Line 2 passing through points (3, 10) and (2, 5) e) What is the purpose of recirculating ball-screw arrangement in CNC machines?	(5 x 2) =10
	Part A	
2	a) Compare the product life cycle in a conventional and computer based manufacturing environment. b) Mention the advantages, limitations and applications of hard and soft automation.	7 3
3	a) A Bezier curve is defined by control points $P_0(0,0)$, $P_1(2,4)$, $P_2(4,4)$, and $P_3(6,0)$. Derive the Bezier curve equation and compute coordinates at t = 0.25, 0.5, and 0.75. b) What is Geometrical Modeling. Explain with example how geometry is different from topology.	7 3
4	A polygon with vertices A (0,4), B (2,4), C (3,3), D (2,3), E (0,2) is first rotated 90° CCW about the point (0,4) and then reflected about a line y = –x. Find the final position of the polygon after these transformations using homogeneous transformations and determine the composite transformation. Plot initial, intermediate and final position of the polygon.	10
	Part B	
5	a) What are Boolean operations in CAD, and how are they used? b) What are some common file formats used in CAD and what are their purposes? c) Differentiate between Bicubic surface and Plane surface.	3 3 4

P.T.O.

6	Write the part program for drilling holes in the part shown below with and without canned cycle. The plate thickness is 20mm. Take suitable assumptions	10

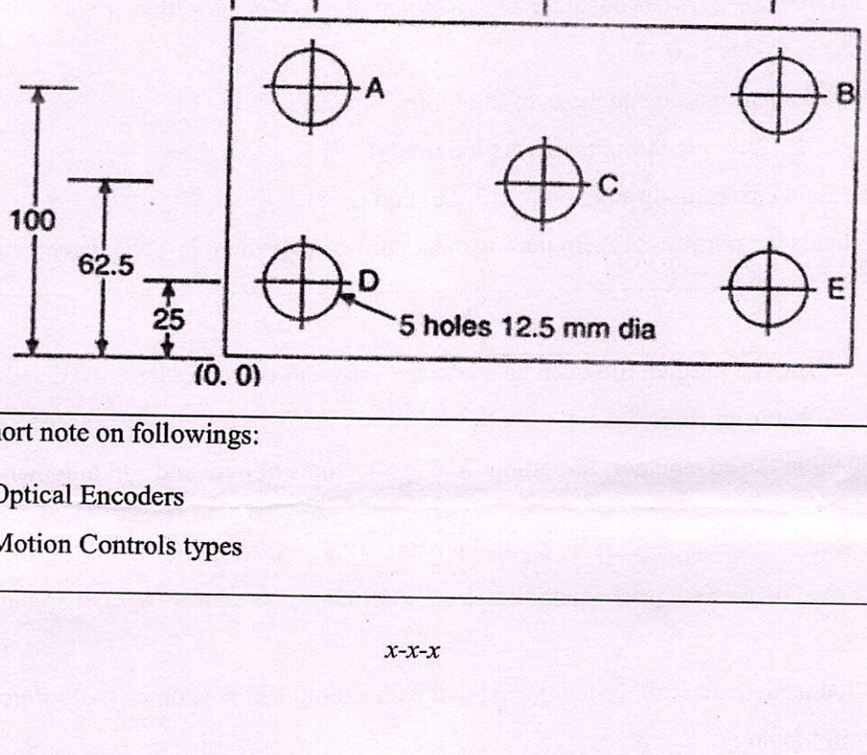

7	Write short note on followings:	
	a) Optical Encoders	5
	b) Motion Controls types	5

x-x-x