Exam.Code:0927
Sub. Code: 33645

2076

B.E. (Electronics and Communication Engineering)

Third Semester

EC-307: Electronics Devices and Circuits

Time allowed: 3 Hours **Max. Marks: 50**

NOTE: Attempt five questions in all, including Question No. I which is compulsory and selecting two questions from each Unit. All questions carry 10 Marks.

x-x-x

Q1.(A) When the reverse gate voltage of JFET changes from 4V to 3.9V, the drain current Changes from 1.3 to 1.6mA then find the value of transconductance.

(B) Explain why a low power FET is called as a square law device.

(C) Why FETs are called Unipolar devices as compare to the BJT as Bipolar device.

(D) What is the effect of Negative feedback on Sensitivity, Bandwidth, Distortion and Input impedance of the amplifier?

(E) What is Thermal Runaway? Write a short note on it. 2x5=10

UNIT-1

Q2.(A) With the help of h-parameter find out the Current gain, Voltage gain, input resistance and output resistance of common collector amplifier using proper diagram.

(B) A Transformer coupled Class A amplifier supplies AC power of 5V to a 4Ω load. If Operating point is located for maximum symmetric swing and Vcc=20V. Calculate 1) Transformer turn ratioN2/N1 2.) Peak output current 3.) Operating Point

Q3.(A) Differentiate between JFET and BJT. Also explain how the transconductance of JFET varies with drain current and gate voltage

(B). Explain the reasons for shift in the operating point of a BJT. Also explain the method of stabilizing the operation point.

Q4.(A) Define stability factor. Explain with circuit diagram of potential divider method of Biasing in transistors.

(B) In the Amplifier shown in the circuit MOSFET has $\mu_n C_{ox}$ W/L=4mA/V^2, λ= 0.01V^{-1} and V_T= -0.2 V. Calculate

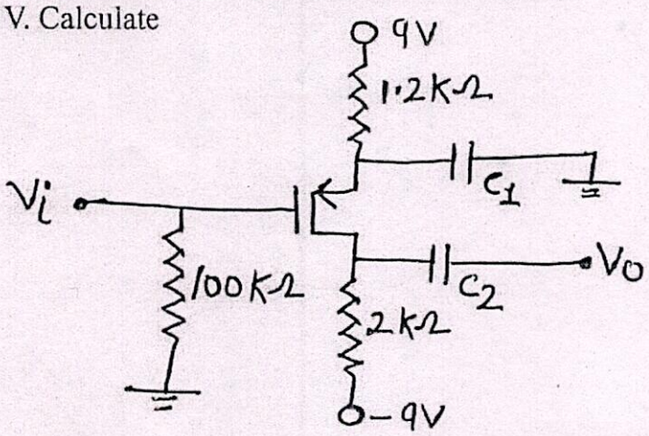

1. ISD and VSD
2. Small signal voltage gain, input and output resistance

P.T.O.

UNIT-2

Q5. (A) Explain the principle of working of transistor Colpitts oscillator. Draw circuit diagram and briefly function of each components.

(B) Explain the working of a push-pull power amplifier with diagram and its merit over Single-ended power amplifier.

Q6.(A) A crystal has the L=0.5H, C_S=0.06pF, C_p=1pF and R=5KΩ. Find the series and parallel resonant frequencies and Q-factor of the crystal. Also write down the conditions for sustained oscillations.

(B) Discuss the effect of emitter by-pass capacitor and shunt capacitor on frequency response of an amplifier.

Q7.(A) What is Miller Effect? Explain. Also prove how the performance of amplifier degrade at high frequency due to this.

(B) draw a circuit diagram of a common source FET amplifier. With the help of small signal equivalent circuit, analyze the amplifier voltage gain and input admittance.

x-x-x