Exam. Code: 0905
Sub. Code: 33255

2076
B.E. (Mechanical) First Semester
MEC-101: Statics

Time allowed: 3 Hours **Max. Marks: 50**

NOTE: *Attempt <u>five</u> questions in all, including Question No. I which is compulsory and selecting two questions from each Part.*

x-x-x

Q1a)Draw a free body diagram for the drum being rolled along the horizontal comes across a stepped obstacle.
b)Explain principle of moments.
c)What is Catenary.
d)Explain rolling resistance.
e)What are conservative forces. (10)

<u>Part-A</u>

Q2a)The forces 20 N,30N,40N,50N and 60N are acting at one of the angular points of a regular hexagon, towards the other five angular points taken in order. Find the magnitude and direction of the resultant. (5)

b)A light string ABCDE whose extremity A is fixed, has weights W_1 & W_2 attached to it at B & C. It passes round a small smooth pulley at D carrying a weight of 300 N at the free end E as shown in Fig 1. If in the equilibrium position, BC is horizontal and AB & CD make 150° and 120° with BC, find (i)Tensions in the strings and (ii) magnitudes of W_1 & W_2. (5)

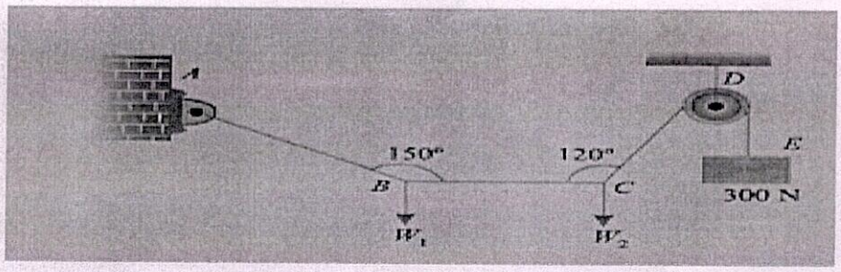

Fig 1.

Q3a)A string 2 m long is tied to the ends of a uniform rod that weighs 60 N and is 1.6 m long. The string passes over a nail, so that the rod hangs horizontally. Make calculations for tension in the string. (5)
b)Two cylinders each of diameter 100 mm and each weighing 200 N are placed as shown in Fig 2. Assuming that all the contact surfaces are smooth, find the reactions at the supports. (5)

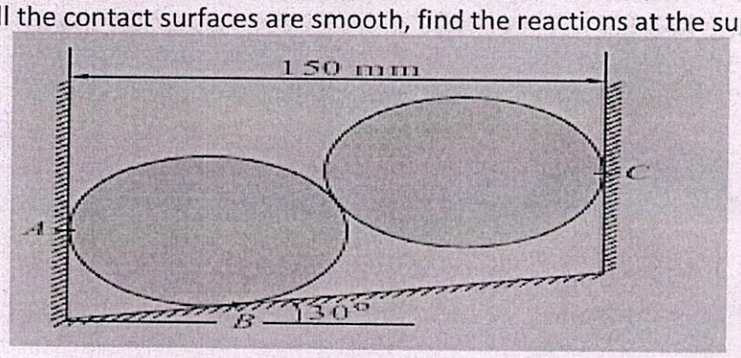

Fig 2.

P.T.O.

Q4a)The jib crane is subjected to three coplanar forces.
i)Replace this loading by an equivalent resultant force alone, without using resultant couple moment.
ii)Specify where the resultant's line of action intersects the column AB. (5)

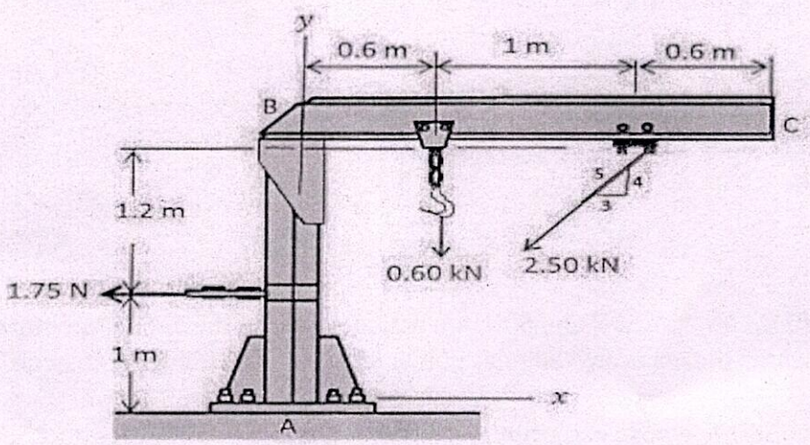

Fig 3.

b)What are the assumptions made while analyzing framed structure. Explain step by step procedure of method of sections to analyze framed structures. (5)

Part-B

Q5a)A simply supported beam of length 6 m ,carries point load of 3 kN and 6 kN at distances of 2 m and 4 m from the left end. Draw the shear force and bending moment diagrams for the beam. (6)
b)What is a catenary. (2)
c)Explain the significance of point of contraflexure. (2)

Q6a)A body resting on a rough horizontal plane, requires a pull of 180 N inclined at 30° to the plane just to move it. It was found that a push of 220 N inclined at 30 ° to the plane just moved the body. Determine the weight of the body and coefficient of friction. (5)
b)The frustum of a solid cone has base diameter 10 cm and the top diameter 5 cm and height 7.5 cm. Determine the centre of gravity of the solid. (5)

Q7a)Derive the relation for mass moment of inertia of solid sphere of radius R. (5)
b)A weight of 5 kN is resting on a smooth surface inclined at 30° to the horizontal is supported by the load W resting on the another smooth surface inclined to horizontal by 45°.Both the weights are connected with a string carried over a smooth pulley .Determine the value of W .Use the principle of virtual work. (5)

x-x-x